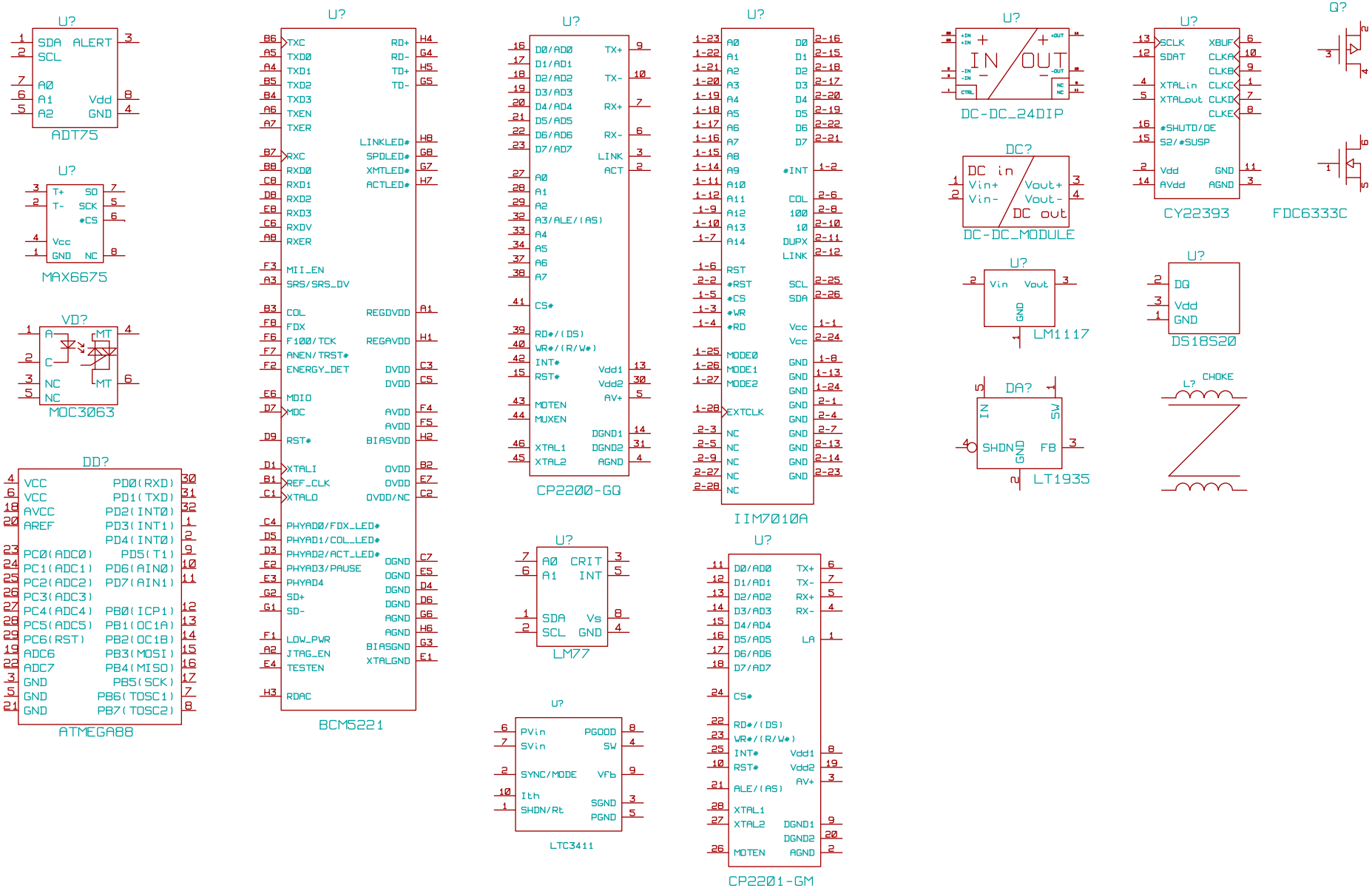

Title: Dmitri Belimov		
Size: A4	Date: 19 jan 2007	Rev: 1.0
KiCad E.D.A. EESchema (2007-01-15)		Sheet: 1/1